Experts in braking

COMLINE

Braking Range

Place your trust in high quality Comline brake pads, discs and calipers.



GREAT BRITAIN

www.comline.uk.com



Comline Global Headquarters,
Bedford, UK

REAL *WORLD* *PERFORMANCE*

Welcome to **Comline**

Comline is an independent British brand making waves across the European automotive industry, with a philosophy based on Real World Performance. Distinctively wrapped in our blue and yellow livery, each Comline product follows a simple recipe - performance you can trust, with the added edge of affordability. This ethos has seen Comline become the choice of distributors, technicians, and motorists in over 40 countries worldwide.

Confidence inspiring performance and reliability is also complemented by high product availability. Four dedicated distribution hubs based in the UK, Ireland, Spain and Greece, consistently operate at 95%+ availability.

Join our growing community by following Comline across social media.

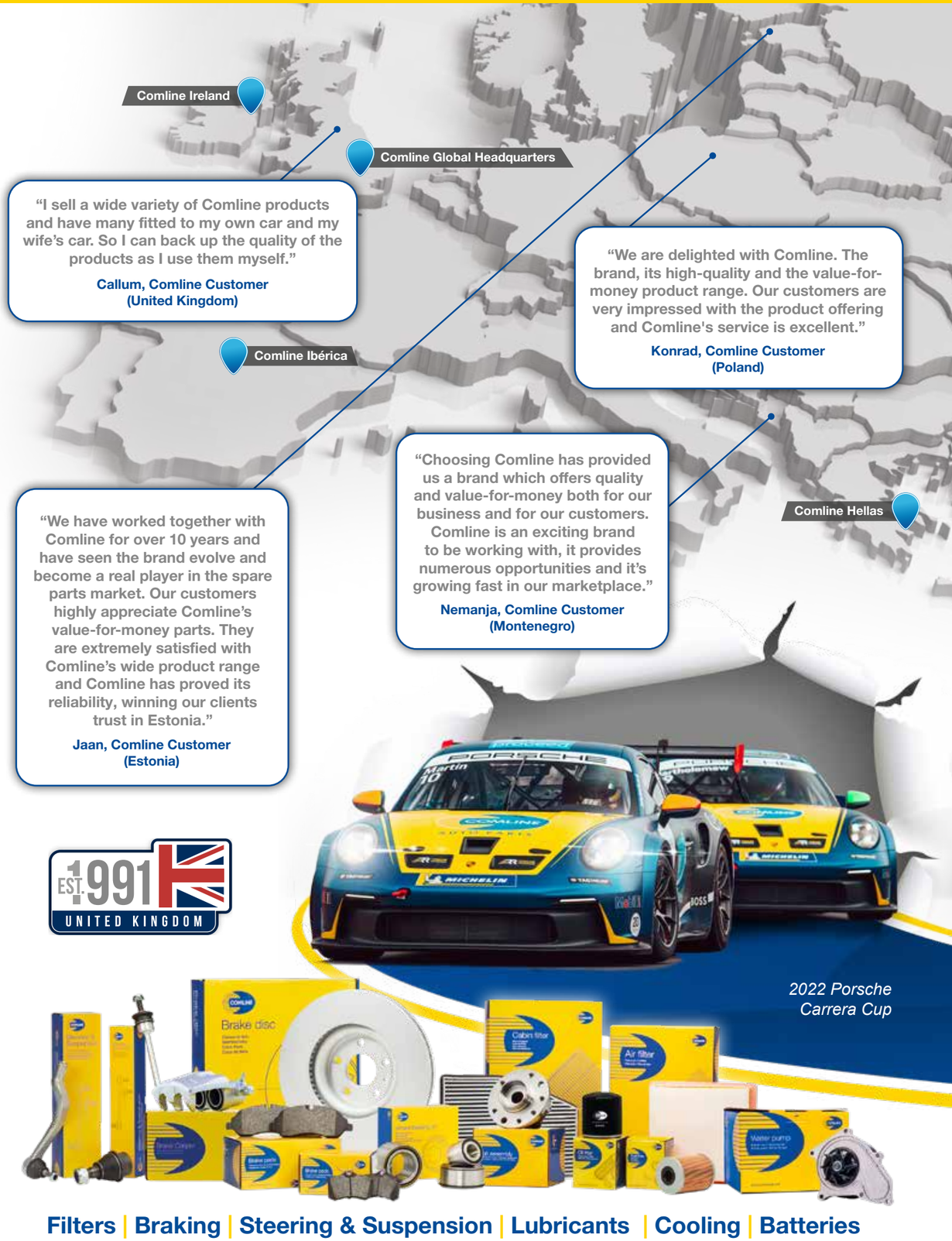

Consistent **Performance**

Comline is a brand synonymous with brake pads and the strength of our offering has played a pivotal role in sustained Comline growth across Europe and beyond.

The brake pad segment is one of the most competitive and fragmented product categories within the automotive aftermarket, but Comline separates itself from the crowd by offering something that many others can't – consistency!

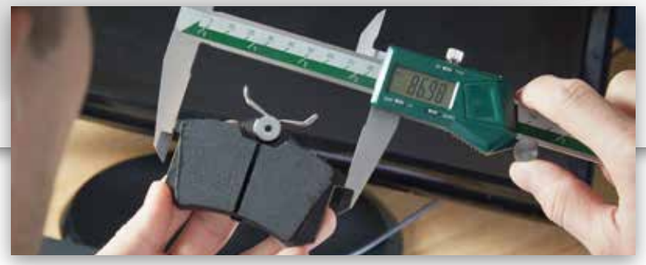



1 As a brake pad manufacturer, Comline is in complete control of materials, specification and process, and uses the same production facilities time after time.

2 This ensures every Comline brake pad is created equally to the same specification and the same high standards.

3 No matter the batch, no matter the production date, no matter the reference, you can always depend on Comline brake pad performance to deliver.



Manufacturing **Excellence**

The importance of the manufacturing process in delivering brake pad performance cannot be overstated. Simply put, a flaw in manufacturing will lead to a defect in the brake pad.

Every aspect of the Comline manufacturing process is carefully refined, optimised and frequently audited to ensure consistent, reliable brake pad performance.

Comline's factory has decades of brake pad production experience and employs state-of-the-art manufacturing techniques that transform carefully selected raw materials into brake pads of genuine quality. The process is as follows:

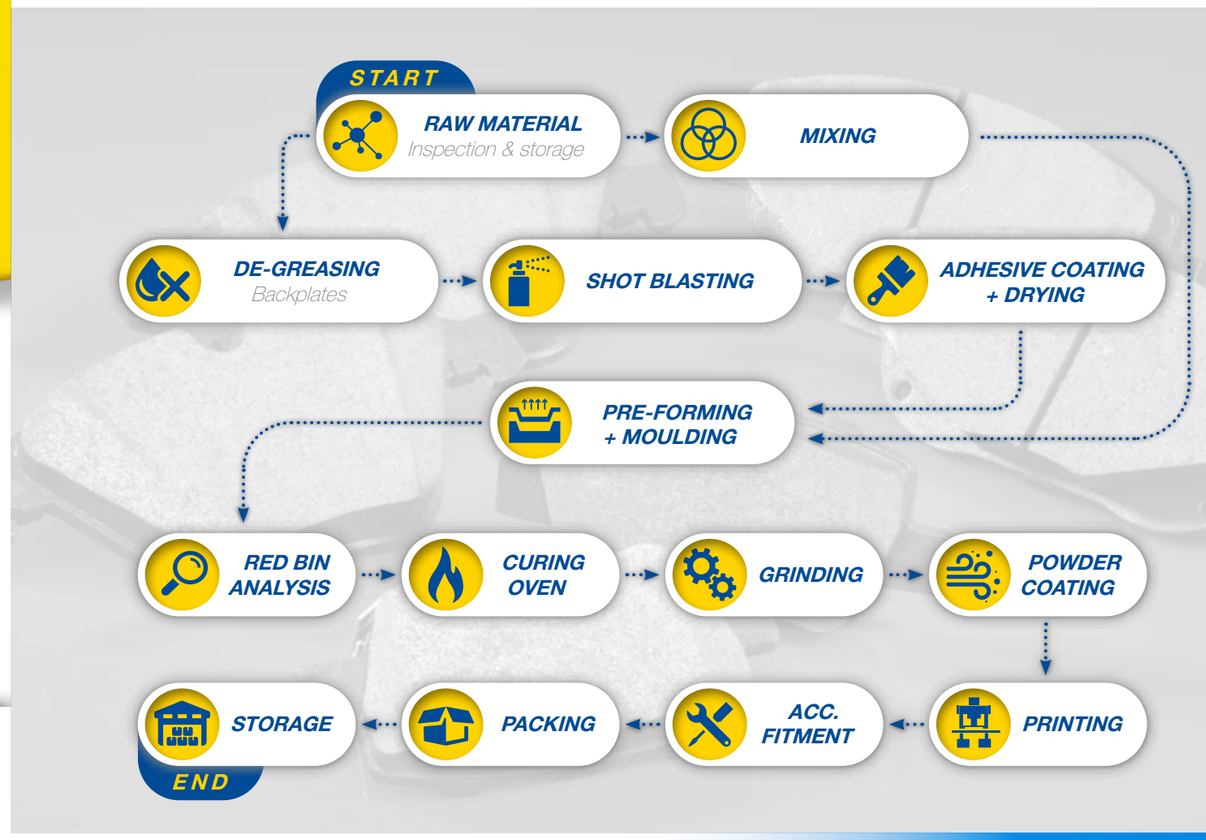



Recipe for **Success**

Producing a friction compound that performs in varied real-world driving conditions is no simple task. Comline's recipe for success all begins with the right blend of raw materials.

Whilst the exact details of Comline's friction compound are a closely guarded secret, it is, in broad terms, a composition of the below materials, each of which performs a specific role within the formulation.

- **Steel fibre** – provides strength
- **Bauxilite** – friction modifier
- **Graphite** – wear modifier
- **Rubber particles** – noise modifier
- **Phenolic resin** – binding agent

COPPER FREE

Studies in the U.S. state of California have cited copper particles eroding from brake pads as a major source of damage to the marine ecosystem.

Whilst not a legal requirement here in Europe, Comline has taken the proactive step of removing copper from its friction formulation. In doing so, Comline has notably earned the 'N' rated leafmark from the Automotive Aftermarket Suppliers Association (AASA), signifying that our pads contain less than 0.5% of copper by weight.

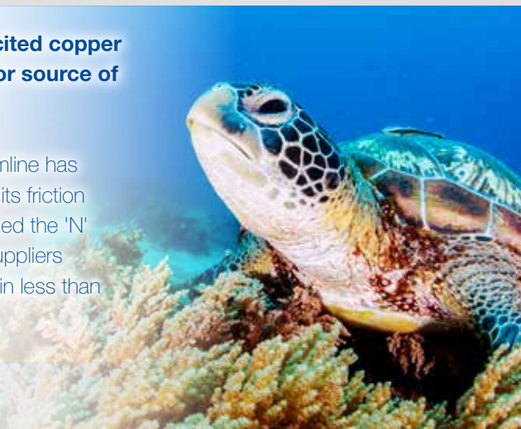

Composition of a **Comline Brake Pad**

FRICTION MATERIAL
Comline's friction material blends an array of raw materials to deliver consistent braking performance at all speeds, temperatures and pressures.

SLOT/GROOVE
Aids in relieving surface stress in the pad material and in dispersing gases and brake debris formed during the braking operation.

CHAMFER
An angled section on the perimeter of the friction material that controls how the pad edge contacts with the brake disc. These chamfers help ensure effective contact to reduce brake noise.

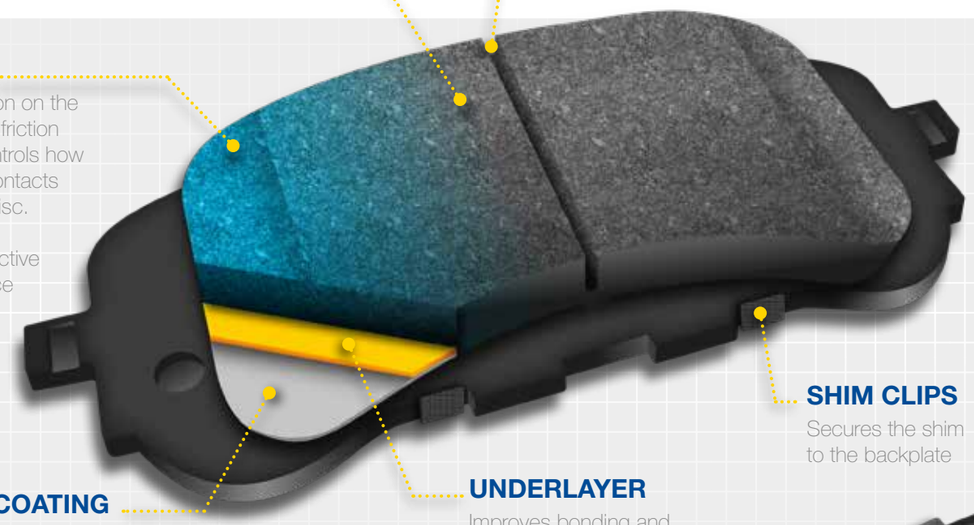

ADHESIVE COATING
Ensures optimal bonding between friction material and back plate.

UNDERLAYER
Improves bonding and provides thermal/noise control

SHIM CLIPS
Secures the shim to the backplate

IDENTIFICATION
Product markings including:

- Part number
- R90 code
- Batch code

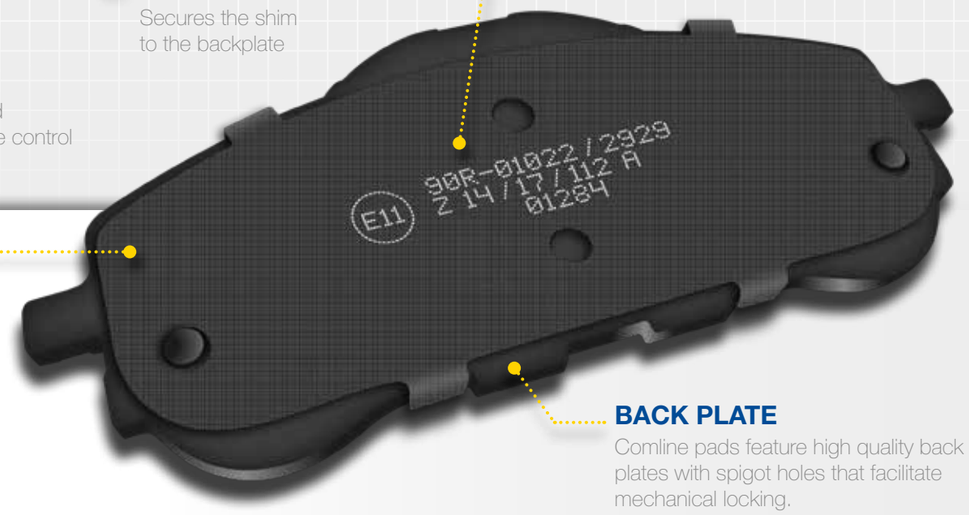

BACKING SHIM
Many Comline applications feature clip-on RMR backing shims which act as vibration dampening to reduce noise and eliminate brake squeal.

BACK PLATE
Comline pads feature high quality back plates with spigot holes that facilitate mechanical locking.



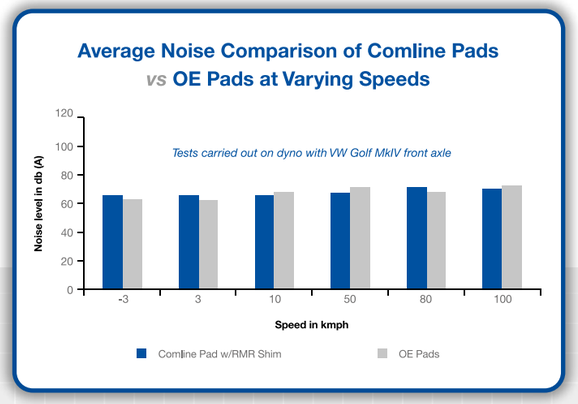

All Makes **Braking**

Comline operates a fast-paced development programme designed to keep our range in-tune with the needs of the European aftermarket. With brake pads for all popular European, Japanese & Korean marques, Comline delivers over 90% vehicle parc coverage.

Impressively, Comline's extensively tested, precisely formulated friction compound delivers superior stopping power for this extensive array of makes and models.



R90 Testing

All Comline brake pads are independently certified under ECE R90 regulations which stipulate that any brake pad be within +/- 15% of the original part in a series of performance tests:

- **Speed sensitivity**
- **Hot braking performance at over 500°C**
- **Cold equivalence**
- **Compressibility**
- **Cold shear**

R90 PLUS

Comline testing doesn't stop with the legal requirements. To truly put our pads through their paces they are subjected to a series of additional tests that further validate the real-world performance of the pad. This includes:

- **Hot shear @ 300°C**
- **Wear testing**
- **AK Master testing (on dyno)**
- **Noise testing at varying speeds and pressures**

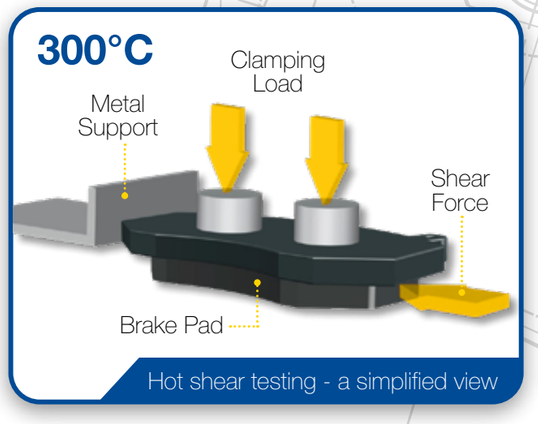

Hot shear testing - a simplified view

Manufactured for **Precision**

Becoming one of Europe's fastest growing automotive brands doesn't happen by chance, it is the result of an unwavering focus on delivering high-quality product and genuine value-for-money for aftermarket customers.

Comline coated brake discs reflect this philosophy, with each part being precisely developed, tested and manufactured to ensure consistent, reliable braking performance.

These efforts ensure that only the finest brake discs carry the Comline name.

Crafting **Perfection**

The development process

Market Research & Prototyping

01

The development process begins with thorough market research aimed at identifying product and vehicle requirements within the market-place. Once a product opportunity is identified a Comline specification is defined and prototype product is created. Before being commissioned for production, this prototype is meticulously analysed against specification to ensure performance and correct fitment.

Material Selection & Testing

02

During the mass production phase only the finest raw materials are selected and each batch of material is sample tested for hardness, tensile strength, chemical composition and structure to ensure a material specification that meets the Comline standard.

Precision Manufacturing

03

To form the perfect brake disc the raw material is then machined using state-of-the-art CNC Machines. These computer controlled machines are employed to ensure absolute precision and consistency for each and every Comline disc.

Specialised Coating

04

Each Comline coated brake disc is then subjected to a 9-stage process to apply an advanced formulation anti-corrosion coating. This coating is applied to all areas of the disc, including the hub and friction surface, to a maximum thickness of 25 microns, ensuring effective rust protection and premium aesthetics.



Comline coated brake discs undergo a 9-stage process to apply a specialised anti-corrosion coating.

1. Pre-degreasing
2. 1st Ultrasonic Degreasing
3. 2nd Ultrasonic Degreasing
4. 1st Water Washing
5. 2nd Water Washing
6. Drying
7. Coating
8. Baking
9. Appearance Checking





Quality **Control**

To ensure our coated discs are primed to deliver real-world performance they are extensively tested both at factory and within the Comline Quality Lab.

Comline coated discs are salt spray tested up to 120 hours. This test guarantees disc durability and coating corrosion resistance.

Every Comline brake disc is 100% inspected for flatness, parallelism, DTV, run-out and dynamic balance, ensuring consistent quality, straightforward installation and outstanding braking performance.

The Finished **Product**

Comline brake discs are packed inside our distinctive, blue-and-yellow Comline boxes and clearly labelled in-line with R90 regulations.

For customer convenience, all product data and specifications are available 24/7 via the TecDoc catalogue and via **www.comline.uk.com**



PREMIER TecDoc® DATA SUPPLIER

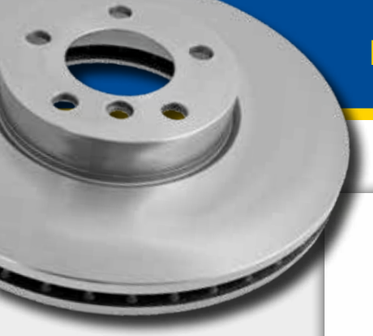



Friction **Expert**

Dr. Keith Ellis

Dr. Keith Ellis, affectionately known as 'Dr Friction' to his colleagues is Comline Director of Braking Product Development and the man behind Comline coated brake discs.

"The move to coated brake discs was a logical next step in the development of our product line. We have successfully sold standard brake discs for many years, but the introduction of our specialised coating has taken the product to the next level. Unlike so-called "painted" versions on the market, Comline coated discs do not need to be degreased and offer a far more durable, protective coating that maintains the appearance of the disc throughout the life of the part."

"Precision manufacturing, in-depth testing, performance, aesthetic appeal... ...and value-for-money make for the perfect braking package!"

Does the coating on the friction surface of the disc affect braking performance?

"No, all of our test data received indicates that our water-based coating has absolutely no impact on braking performance."

"It may seem counterintuitive to apply a coating to the friction surface but this specialised coating actually dissipates during early use. With Comline coated discs, the brakes need only be applied on a handful of occasions before the specialised coating fades away to expose the braking surface."

"With zero impact on braking performance and the added benefit of not having to degrease the disc the benefits are clear."

Why is it crucial to 'bed-in' new brake discs?

"Bedding in' is a simple but essential procedure to prevent the cracking or distortion (warping) of new brake discs. Within the first 200 miles of being fitted new discs are susceptible to warping if subjected to the severe temperatures caused through aggressive braking. This is not due to any sort of manufacturing flaw but rather the natural, physical properties of a metal that has been cast at high temperatures and then cooled."

The simple analogy is a block of ice. Pour hot water onto ice and it will crack due to thermal shock; warm it more gently and the ice will melt without any such drama. A new brake disc is much the same and gradual changes in temperature are needed to relieve the thermal stresses stored within the disc material."

For any motorist, the simple way to prevent thermal shock and the warping of a new brake disc is to adopt a conservative approach where appropriate to braking. This should be done within the first 200 miles post-fitment, thus allowing the discs to 'bed-in' effectively."

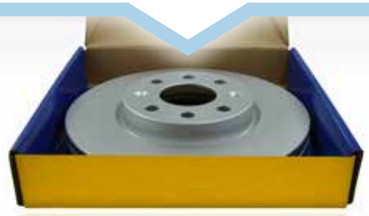

Comline Coated Brake Discs – At a glance

Performance

The **finest combination of materials and manufacturing** processes are combined to deliver consistent, reliable braking performance.

Time Saving

Comline's specialised anti-corrosion coating ensures that our discs are **fitment ready right out the box** and require no cleaning or degreasing; saving valuable labour time for the technician.

Premium Appearance

The specially formulated **anti-corrosion coating** provides a **protective layer** to ensure a premium, life-long appearance behind the alloy wheel.

Coverage

Our comprehensive braking range covers all popular European, Japanese and Korean vehicles, with **over 950** of our most popular references **available as a coated variant.**

Development

Our ongoing commitment to **product development** keeps the Comline product range in line with the needs of the market.

Data Prowess

Find the right Comline brake disc with **premier-rated data** available on TecDoc and via the Comline website.

Experts in **Braking**

All-new, surcharge-free caliper units

Complementing our existing range of brake pads and discs, Comline calipers carry the same promise of guaranteed performance, absolute reliability and inherent value for money.

Like their stablemates, this product range will carry the same Comline promise of delivering guaranteed performance, absolute reliability, and inherent value for money.

Aligned with the wider Comline range, our caliper line-up has been carefully assembled to cater for the most popular vehicles across the European vehicle parc. Comline calipers are built for your business and for "real world" vehicle applications.



All **New Units**

Comline's caliper line-up comprises all new units with zero remanufacturing or surcharge requirements.

This not only guarantees product quality but also avoids the time-consuming and laborious process of shipping back product for remanufacture and claiming old-unit caliper surcharges.

Here at Comline we are aiming to free aftermarket customers from the pain and inconvenience of surcharges that are synonymous with remanufactured caliper units.

Comline calipers are all new and exempt from any such surcharge requirements meaning our customers do not need to spend their valuable time arranging returns, chasing surcharge payments, or handling unwanted admin.



– Nick Weir
Comline Product & Business Line Manager

COMLINE
CALIPERS AT A GLANCE

- **All new units (zero remanufacturing / surcharge)**
- **1000+ part numbers covering all popular makes and models**
- **Precisely manufactured from cast iron or lightweight aluminium**
- **Includes electronic park brake applications**
- **3-year (36,000mile / 60,000km) warranty**

The Comline **Caliper Range**





Sliding

- This type of caliper has piston(s) only on one side of the disc which slides back and forth on bushings or pins, acting as a clamp.
- When the brakes are applied, the piston pushes the brake pad only on the inboard side of the disc.
- The caliper then slides on the bushings or pins and squeezes the outboard pad against the disc, and thus initiates the braking action.



Fixed

- A fixed caliper usually consists of 2,4,6 or even 8 pistons. Comline offers 2 & 4 piston calipers as part of our "real world" range, as 6 & 8 piston options are typically the reserve of high performance vehicles.
- A fixed caliper is mounted to a bracket with no sliding pins or bushings in its mount.
- The fixed caliper consists of an equal number of pistons on both the inboard and outboard halves of the caliper. It is generally accepted that fixed calipers perform better.



Rear - Manual Handbrake

- Conventional park brakes are actuated using a handbrake lever, whereby mechanical force is transferred to the handbrake function of the brake caliper via the handbrake lever and the handbrake cables. This presses the brake pads onto the brake discs, and the vehicle is prevented from rolling away.



Rear - EPB (Electronic Parking Brake)

- The EPB brake caliper is equipped with an additional electric motor, which operates the electronic parking brake by putting pressure on the pistons via a transmission, thus also putting pressure on the brake pads and discs. The parking brake therefore saves space and is directly integrated into the EPB brake caliper.



EPB technology is increasingly prevalent in today's vehicle designs and the ratio of EPB-equipped calipers in our range will continue to grow significantly in the coming years.

Perfect **Production**

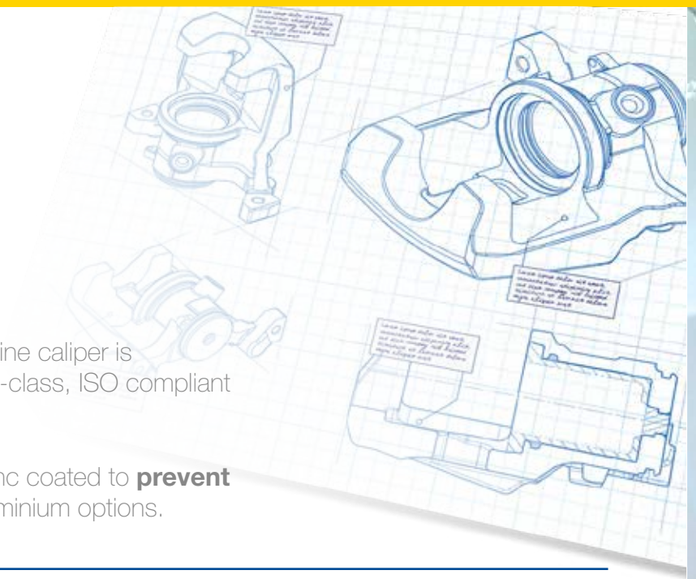

Quality Control

Manufactured to **OE specification**, every Comline caliper is precisely crafted to **TS1649 standards** in world-class, ISO compliant manufacturing facilities.

Standard cast iron references, all of which are zinc coated to **prevent corrosion**, are offered alongside lightweight aluminium options.



Precision Manufacturing

Leaving nothing to chance, quality is assured thanks to **extensive control procedures**, which test each component in a variety of environments against stringent criteria.

This includes pressure performance monitoring from 0.4MPA - 7MPA and corrosion resistance analysis via an accelerated salt spray test.

3-Year Warranty

All Comline brake calipers are warrantied against manufacturing or material defects for **3-years (36,000mile / 60,000km)**.

Comline 2-Year 24,000mile / 40,000km Warranty

SIGNS OF A FAULTY BRAKE CALIPER

- **Vehicle pulls to one side when driving/braking**
- **Uneven brake pad wear**
- **Audible Squealing, rubbing or clunking**
- **Brake fluid leaking around the tyre area**

All Makes **Range**

Comline was founded as an ‘all makes’ brand, and we continue to make it our mission to supply parts for all popular European, Japanese & Korean vehicles.

Day-in-day-out, Comline continues to develop its product range to stay aligned with an ever-changing vehicle parc, bringing reliability and affordability to a comprehensive list of passenger car and light commercial vehicle applications.

The Future of the **Aftermarket**

The future is electric, and Comline is embracing the revolution with an ever-expanding range of references for Hybrid and Electric Vehicle models.

- **700+ part numbers currently available for Electric and Hybrid vehicles, covering 150+ model variants**
- **A dedicated development programme adds new EV and Hybrid products to range each month**





Stay up to date with our New to Range and subscribe today, contact ***marketing@comline.uk.com***

Comline Auto Parts Ltd
Unit 4A/4B Bedford Commercial Park
Swallow Way, Bedford
MK43 9ST, United Kingdom

T +44 1582 578 888

Comline Ireland Ltd
Unit 12, Monaghan Business Park
Clones Road, Monaghan
H18 CC43, Ireland

T +353 47 81311

Comline Ibérica S.L.
Comline Ibérica S.L., Avda. de las Palmeras
8-Nave 2 Polig. Ind. La Sendilla
28350 Ciempozuelos, Madrid, España

T +34 916 846 044

Comline Hellas S.A.
Agias Annis 74
Egaleo 122 41
Greece

T +30 210 3474607

TecDoc Premier Data Supplier